DCS METHOD C

DCS
DATA CENTER SYSTEMS
A Hexatronic Group Company

DCS METHOD C

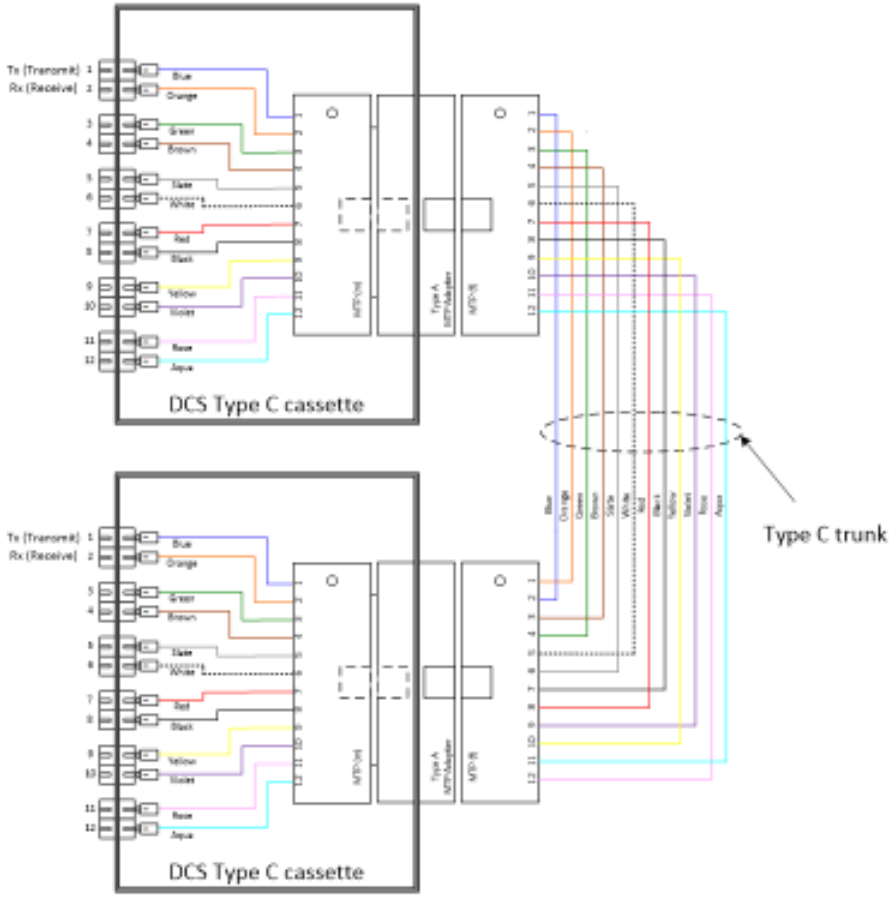

TIA METHOD C

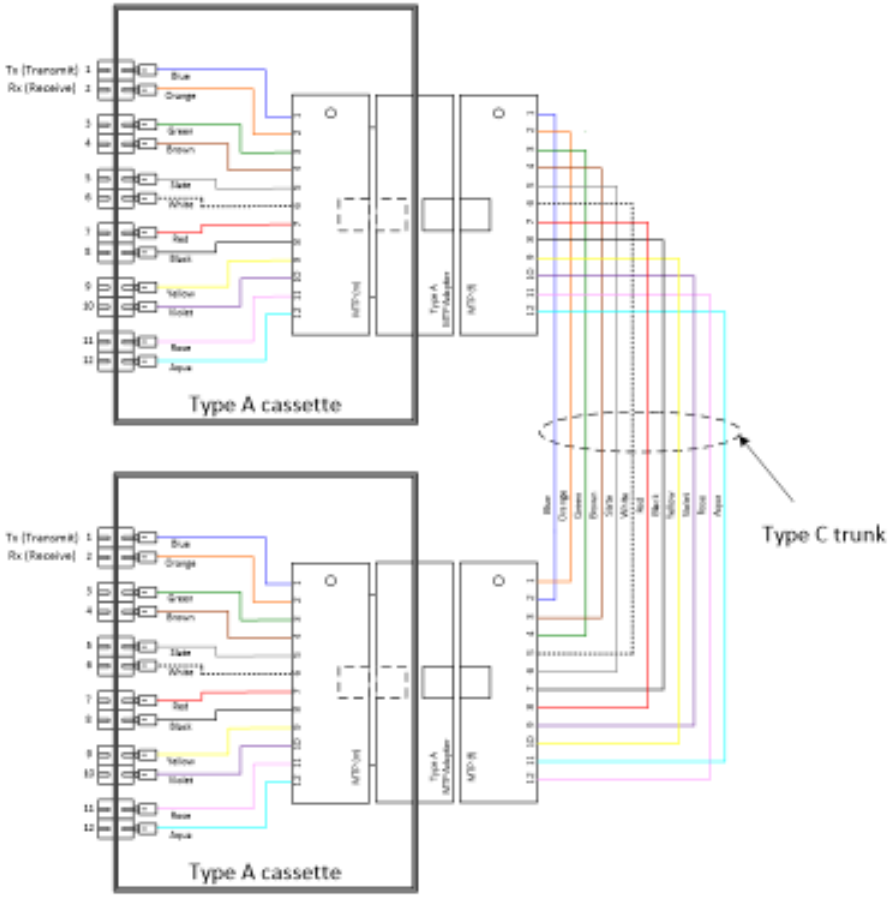

Confidential: This document contains information of a proprietary nature to Data Center Systems. Any reproduction, use or dissemination of said information in whole or part without the express written consent to Data Center Systems is prohibited.

ISO 9001:2015
BUREAU VERITAS
Certification